NEA
NATIONAL ELECTRONIC ALLOYS
Specialty Metal Service Center
Dedicated to Customer Service & Quality

NEA NATIONAL ELECTRONIC ALLOYS

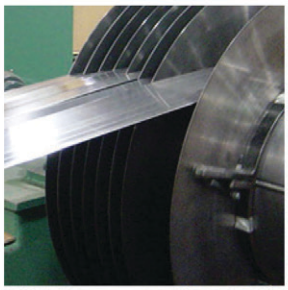

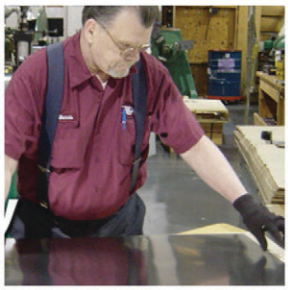

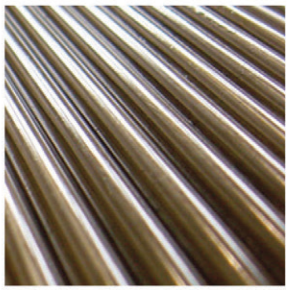

National Electronic Alloys, home of one of the world's largest inventory of Controlled and Low Expansion Alloys. ASTM F15 Alloy (Kovar), Alloy 36 (Invar 36), 42 Alloy, 45/46 Alloys, 47/50/48/49 Alloys, 52 Alloy, Nickel 200/201, Shielding Alloys (HyMu 80), Molybdenum, OFHC Copper, Nickel Silver, Cupro Nickel, 300 series Stainless and more. All materials in stock can be shipped generally within 1-3 business days.

We are an ISO Certified company. All products are DFARS Compliant and are also in conformance with Section 1502 of the Dodd-Frank Wall Street Reform and Consumer Protection Act of 2010.

NEA is truly a full-service operation equipped with a large fleet of state-of-the-art precision slitting, shearing and saw cutting machinery. We can provide material custom-sized to your exact requirements and hold the tightest of dimension tolerances. Our abundant machining capacity enables us to process your orders quickly. Materials can be shipped in as little as 24 hours.

How Our Insight Makes A Difference: In this industry, experience means a lot. It means an awareness of your needs and objectives that is reflected in everything we do. Dick Geoffrion's background includes management positions in the procurement of materials and quality control for International Telephone & Telegraph (ITT). For the past three decades he has been involved in supplying materials to the microwave, vacuum tube, hybrid and semiconductor industries. With this experience from the procurement side, coupled with years on the supply side, Dick Geoffrion gives our company a unique insight into our customers' needs. Our approach is to anticipate your procurement worries and to provide MORE FEATURES than you ordinarily would expect:

QUALITY — The Leader…we leave the others behind.

SERVICE — From Stock...very rapid action.

PRICE — Competitive...check it out.

RELIABILITY — Overall...when you evaluate us and our competitors, you'll want what we have to offer.

METAL FROM STOCK

The Most Extensive Selection of Hermetic Sealing Alloys

Controlled Expansion Alloys

Kovar Commonly used for high integrity Glass and Ceramic to metal seals, Lids, Lead Frames and Electronic package base plates.

Alloy 36 A Low Expansion Alloy known for good stability over a wide temperature range making it ideal for many applications.

42 Alloy This nickel-iron alloy is ideal for lid, lead frames, stencil/etching, telecommunications and aircraft industry.

45 Alloy, 46 Alloy With it's relatively constant expansion rate, this alloy's predictability allows usage in applications such as terminals and thermostats.

47/50 Alloy, 48,49 Alloy A versatile alloy used in both controlled expansion and shielding applications.

52 Alloy This alloys expansion characteristics make it a good match with glass used in sealing Semiconductor devices.

Low Expansion Alloys

Alloy 36 A Low Expansion Alloy known for good stability over a wide temperature range making it ideal for many applications.

42 Alloy This nickel-iron alloy is ideal for lid, lead frames, stencil/etching, telecommunications and aircraft industry.

Electronic Grade Materials

Nickel 200/201/233 A good combination of Toughness, Ductility, Electrical Conductivity, Corrosion Resistance and Strength Retention at high temperatures.

Cupro Nickel, Nickel Silver, Phosphor Bronze Copper based alloys with good corrosion resistance used in coining and stamping applications generally with an aesthetic value.

OFHC Copper 101 & 102 Oxygen Free High Thermal Conductivity are the trademarks of these high copper metals.

Shielding Alloys

HyMu 80 This unique chemistry allows for excellent shielding properties in protecting sensitive devices from stray magnetic waves.

47/50 Alloy, 48,49 Alloy A versatile alloy used in both controlled expansion and shielding applications.

Miscellaneous Grades

1010 Carbon Steel A low carbon steel with good formability and ductility, this metal is typically used in structural and housing type applications.

Stencil Grade Metals

301/302/304 Stainless Excellent Workability, Corrosion Resistance and Strength, these alloys are used for applications that require good appearance and wear.

Alloy 36 A Low Expansion Alloy known for good stability over a wide temperature range making it ideal for many applications.

High Temperature Metals

Molybdenum This low expansion metal offers great strength and excellent Corrosion Resistance.

Tungsten With a high melting point this metal is used for in a wide variety of industries such as Lighting, Tooling and Aerospace.

Tantalum Strong, Ductile this metal exhibits extremely high corrosion resistance.

Non Stock Alloys

Let us help you procure your alloy.

Stocking Programs Available

Nickel Iron Alloy Comparison Chart

(For reference only)

CHEMICAL COMPOSITION %							
Chemical Element	**Percentage**	**ASTM F15 Alloy (Kovar)**	**52 Alloy**	**48 Alloy**	**46 Alloy**	**42 Alloy**	**36 Alloy (Invar)**
Iron	Nominal	Bal	Bal	Bal	Bal	Bal	Bal
Nickel	Nominal	29	50.5	48	46	41	35
Cobalt	Nominal	17					0.50
Manganese	Max.	0.50	0.60	0.80	0.80	0.80	0.60
Silicon	Max.	0.20	0.30	0.30	0.30	0.30	0.40
Carbon	Max.	0.04	0.05	0.05	0.05	0.05	0.05
Aluminum	Max.	0.10	0.10	0.10	0.10	0.10	0.10
Magnesium	Max.	0.10					0.10
Zirconium	Max.	0.10					0.10
Titanium	Max.	0.10					0.10
Copper	Max.	0.20					
Chromium	Max.	0.20	0.25	0.25	0.25	0.25	0.25
Molybdenum	Max.	0.20					
Phosphorus	Max.		0.025	0.025	0.025	0.025	0.015
Sulfur	Max.		0.025	0.025	0.025	0.025	0.015

PHYSICAL PROPERTIES							
Property	**Unit**	**ASTM F15 Alloy (Kovar)**	**52 Alloy**	**48 Alloy**	**46 Alloy**	**42 Alloy**	**36 Alloy (Invar)**
Density	Lbs/in²	0.302	0.300	0.298	0.295	0.293	0.291
Specific Gravity		8.36	8.30	8.25	8.17	8.12	8.05
Specific Heat				0.12	0.12	0.12	0.123
Curie Temperature	°F	815	986	880	860	716	535
Melting Point	°F	2640	2600	2600	2600	2600	2600
Electrical Resistivity	Ohm-cir mil/ft	294	260	290	277	430	495
Thermal Conductivity	BTU/In/ft²/hr/°F	120	97	90	79.2	74.5	72.6

Temp. range – °C	Linear coefficient of thermal expansion cm. per cm. per °C x 10^{-6}						
	Kovar - 1	52 Alloy - 2	48 Alloy - 3	46 Alloy - 4	42 Alloy - 5	42-6 Alloy - 6	Invar - 7
30-150	—	—	—	—	—	—	1.2 - 2.7
30-200	—	—	—	—	—	—	—
30-300	—	—	—	—	4.0 - 4.7	—	—
30-350	—	—	—	7.1 - 7.8	—	8.5 - 9.2	—
30-400	4.6 - 5.2	—	8.2 - 9.2	—	—	—	—
30-425	—	—	—	—	—	9.7 - 10.4	—
30-450	5.1 - 5.5	9.6 - 10.1	—	—	6.7 - 7.4	—	—
30-500	—	—	—	8.2 - 8.9	—	—	—
30-550	—	10.2 - 10.7	9.6 - 10.3	—	—	—	—

MECHANICAL PROPERTIES (As Annealed)							
Tensile Strength	PSI x 1000	75	80	79	80	82	65
Yield Strength	PSI x 1000	50	40	36	35	40	40
Elongation	% in 2”	30	35	30	30	30	35
Hardness	Rockwell B	80	80	80	80	80	80
Elastic Modulus	psi x 10(-6)			24	21	21.5	20.5

F15 ALLOY (KOVAR) MIL I 23011C CLASS 1

WE SELL F15 ALLOY THAT IS CERTIFIED TO NO PHASE TRANSFORMATION AT –196°C
BEST QUALITY IN THE INDUSTRY

NICKEL IRON COBALT • GLASS & CERAMIC SEALING ALLOY FOR HIGH INTEGRITY GLASS & CERAMIC TO METAL SEALS

ASTM F15 Alloy

(KOVAR)
COIL THICKNESSES

.004	.0142	.043
.0045	.0145	.045
.005	.015	.050
.006	.020	.059
.008	.025	.060
.0098	.030	.062
.010	.035	.070
.012	.040	.082

ALL COIL SLIT TO YOUR WIDTH

ASTM F15 Alloy

(KOVAR)
MIL I 23011C CLASS 1
NI/IRON/COBALT ALLOY
PLATE - HOT ROLLED

.150 X 15 X 72	.500 X 15 X 72
.164 X 15 X 72	.515 X 15 X 72
.187 X 15 X 72	.540 X 15 X 72
.210 X 15 X 72	.587 X 15 X 72
.235 X 15 X 72	.625 X 15 X 72
.250 X 15 X 72	.687 X 15 X 72
.260 X 15 X 72	.700 X 15 X 72
.281 X 15 X 72	.750 X 15 X 72
.312 X 15 X 72	.850 X 15 X 72
.320 X 15 X 72	.860 X 15 X 48
.375 X 15 X 72	.875 X 15 X 48
.390 X 15 X 72	1.00 X 15 X 31
.400 X 15 X 72	1.50 X 15 X 31
.425 X 15 X 72	2.00 X 15 X 24
.437 X 15 X 72	

OTHER SIZES ALSO AVAILABLE

ASTM F15 Alloy

(KOVAR)
SHEET COLD ROLLED,
BRIGHT ANNEALED
MIL I 23011C, CL. 1

TK		WIDTHS		LENGTH
.015	x	12, 13, 24”	x	72
.020	x	12, 13, 24”	x	72
.025	x	12, 13, 24”	x	72
.030	x	12, 13, 24”	x	72
.035	x	12, 13, 24”	x	72
.040	x	12, 13, 24”	x	72
.050	x	12, 13, 24”	x	72
.060	x	12, 13, 24”	x	72
.062	x	12, 24”	x	72
.072	x	12, 24”	x	72
.078	x	12, 24”	x	79
.080	x	12, 24”	x	72
.090	x	Random Width	x	72
.092	x	Random Width	x	72
.100	x	Random Width	x	72
.115	x	Random Width	x	72
.125	x	Random Width	x	72

ASTM F15 Alloy

ROD (KOVAR)
CERTIFIED TO –196°C
NO PHASE TRANSFORMATION

DIAMETERS

.040	.187	.500	1.375
.050	.200	.562	1.500
.060	.203	.625	1.625
.062	.218	.750	1.750
.100	.250	.875	2.0
.125	.312	1.0	2.125
.156	.375	1.125	2.5
.178	.437	1.250	3.0

LARGER SIZES AVAILABLE UP TO 6” DIA.

ASTM F15 Alloy

(KOVAR)
MIL I 23011C, CL. 1
CHEMICAL MILLING GRADE
ETCHING QUALITY
COIL OR SHEET

.004 x 12 x COIL	.0125 x 12 x COIL
.0045 x 12 x COIL	.0142 x 12 x COIL
.005 x 12 x COIL	.0145 x 12 x COIL
.006 x 12 x COIL	.015 x 12 x COIL
.008 x 12 x COIL	.020 x 12 x 72
.0095 x 12 x COIL	.025 x 12 x 72
.010 x 12 x COIL	.030 x 12 x 72

HIGH RELIABILITY

Working in both the semiconductor and the glass-to-metal sealing industry has taught us to understand the quality of the product needed to make good seals. The material we sell certifies to no phase transformation down to and including -196°C, which represents significantly better quality than what is called for in ASTM and MIL I specifications.

This material quality is a direct result of our using the latest in computer-controlled vacuum-melting technology. The computers assist the manufacturer in analyzing and adjusting the heat while the metal is in its molten form — putting three major elements together in an alloy that is much more precise, homogeneous and stable than had previously been possible.

This vacuum-processed, highly stable material helps the processor to make better parts in addition to giving the seal company a better, more stable alloy with which to work. This high-quality material is a result of the demand for a more stable material for the military, armament, aerospace, semiconductor, hybrid, computer and communications industries.

WHY –196°C IS SO IMPORTANT

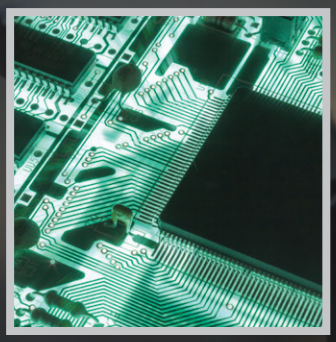

Today's rapidly advancing technological world requires high tech alloys to meet the demands of these newer complex applications. Some of the older alloys such as ASTM F15 Alloy (Kovar), has stood the test of time and is still widely used in both old and new technologies.

The AMS I 23011 and ASTM F15 are the standards that define the parameters of testing for ASTM F15 alloy. Coefficient of Thermal Expansion and Phase Transformation are two important characteristics that are tested under these standards. The Coefficient of Thermal Expansion defines the rate of expansion for a specific material in a range of temperatures. Phase Transformation, on the other hand, involves monitoring changes in the metal's microstructure that can occur due to exposure to a wide range of temperatures. This is a key factor in establishing a highly stable alloy. "No Phase Transformation" @ –78.5°C and –80°C are the current minimal parameters set in these standards.

NEA has privately researched and defined an extension to far exceed these parameters, certifying our ASTM F15 Alloy to allow "No Phase Transformation" down to –196°C.

So why does it matter?

–196°C is the temperature of liquid nitrogen and what is used in this extended testing. This extreme temperature mimics the colder temperatures in space making it useful in testing for Aerospace engineering and design. Material that meets these extended parameters provides a more stable material and, therefore, a more stable and reliable part.

Understanding today's needs for Controlled and Low Expansion Alloys and striving to achieve the maximum capability will continue to prove the value of these time-tested Alloys.

INVAR 36 Alloy

Lo Expansion
MIL I 23011C, CL 7

Size	Coil	Sheet	Foto Etching	24"/ 26"
.004	–	–	✔	
.005	–	–	✔	✔
.006	–	–	✔	✔
.007	–	–	✔	✔
.008	–	–	✔	✔
.010	✔	✔	✔	✔
.015	✔	✔	✔	
.020	✔	–	✔	
.031	✔	✔	✔	
.041	–	✔	–	Laser Cutting Grade
.061	–	✔	–	
.100	–	✔	–	
.125	–	✔	–	

INVAR PLATE – HOT ROLLED

Size	Smooth Ground	With Oxide
.187	✔	–
.250	✔	✔
.375	✔	–
.500	✔	✔
.625	✔	✔
.730	✔	✔
.750	✔	✔
1.0	✔	✔
1.250	–	✔
1.5	–	✔
2.0	–	✔
2.5	–	✔
3.0	–	✔
4.0	–	✔
4.625	–	✔
5.0	–	✔

Wire & Rod Available From Stock

INVAR ROD – MACHINE GRADE

3', 6' or 12' RANDOM LENGTHS

Dia.	Dia.	Dia.	Dia.
.078	.437	1.500	3.500
.093	.500	1.750	4.00
.100	.625	2.00	4.500
.125	.750	2.250	5.00
.200	.875	2.500	5.500
.250	1.00	2.750	6.00
.375	1.250	3.00	

Invar Wire, Please Call

ASTM F30 Alloy
42 Alloy

Chemical Milling
Deep Draw Quality
(Lead Frame Quality)

Size	Coil Slit To Your Width	Sheet Sheared To Your Width	Photo Etching & Chemical Milling Grades	Coil Lead Frame Or Deep Draw
.004x12	✔	✔	✔	✔
.0045x12	✔	✔	✔	✔
.005x16	✔	✔	✔	✔
.006x16	✔	✔	✔	✔
.0075x16	✔	✔	✔	✔
.008x16	✔	✔	✔	✔
.0095x12	✔	✔	✔	✔
.010x16	✔	✔	✔	✔
.012x12	✔	–	–	✔
.0142x12	✔	✔	✔	✔
.015x16	✔	✔	✔	✔
.020x24x72	–	✔	–	✔
.025x12	✔	–	–	✔
.0285x12	✔	–	–	✔
.030x24x72	–	✔	–	✔
.040x24x72	–	✔	–	✔
.043x12	–	–	–	✔
.050x12	–	–	–	✔
.059x12	–	–	–	✔
.060x12	–	–	–	✔
.061x12	–	–	–	✔
.080x8	–	–	–	✔
.125x16x72	–	✔	–	✔

42 ALLOY PLATE – HOT ROLLED

Thickness	Ground Surface	With Oxide
.180	✔	–
.210	✔	–
.250	✔	✔
.320	✔	–
.375	✔	✔
.437	✔	✔
.500	✔	–
.625	✔	–
.750	✔	–
1.00	✔	–
3.75	–	✔

45/46 Alloy

From Stock

All Certified Chemical & Physical Analysis

COIL

.015" x 12.5" x coil
.020" x 12.5" x coil
.025" x 12.5" x coil
.030" x 12.5" x coil
.040" x 12.5" x coil
.050" x 12.5" x coil
.060" x 12.5" x coil

Will Slit To Your Size

PLATE*

.155" .375"
.250" .500"
.330" .750"
.340"

Shearing and Saw Cutting Available

*Other Sizes Available on Request

SHEET

.015" x 8.5" x 72"
.020" x 8.5" x 72"
.030" x 8.5" x 72"
.060" x 24" x 72"
.061" x 25.8" x 72"
.070" x 24.5" x 72"
.082" x 24" x 72"
.130" x 10" x 72"
.155" x 10" x 72"

Will Shear To Your Width

CHEMICAL MILLING COIL

.015" x 12.5" x coil or sheet
.020" x 12.5" x coil or sheet
.025" x 12" x coil

48/49 Alloy

Hot Rolled Plate

Thick.		Width		Length
.145	x	16.250"	x	72"
.250	x	16.250"	x	72"
.300	x	5"	x	72"
.300	x	3.500"	x	63"
.450	x	16.250"	x	72"
.550	x	16.250"	x	72"

Sheet

Thick.		Width		Length
.025	x	15"	x	72"
.030	x	15"	x	72"
.060	x	9"	x	72"
.135	x	24"	x	72"

Round Rod

0.250 Diameter 1.500 Diameter
1.125 Diameter 1.750 Diameter
1.250 Diameter

Coil

Cold Rolled — Slit to Your Width

.004	x	8 or 12
.006	x	8
.010	x	12
.014	x	12
.020	x	12
.030	x	3.8
.090	x	12.5
.061	x	12.5

Other Sizes Available on Request

Shielding Alloys

MIL N 144 11C • HY MU 80

MU METAL 2

48 ALLOY • 49 ALLOY

ROUND BAR (144" Random Lengths)

1/4"	1"
1/2"	1-1/2"
3/4"	2"

Special Diameter Sizes Upon Request
Alloy 49 (Comp 3) Also Available From Stock

SHEET

.014 x 24 x 120
.020 x 24 x 120
.025 x 24 x 120
.030 x 24 x 120
.040 x 24 x 120
.050 x 24 x 120
.062 x 24 x 120

COIL

.004 x 12 x COIL
.006 x 12 x COIL
.010 x 12 x COIL

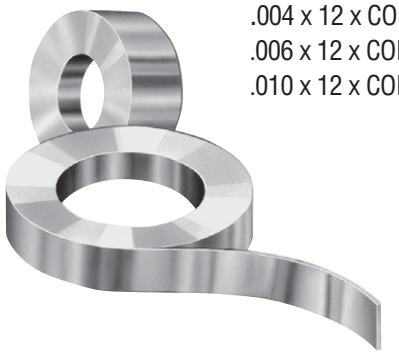

52 Alloy

Sheet

.010 & .015 Thickness
Will Shear to Your Size

Round Rod

.040"	.162"
.0595"	.187"
.062"	.250"
.093"	.312"
.125"	.375"
.156"	.437"

Coil/Sheet

Cold Rolled - Slit to Your Width
.010 & .015 Thickness

Nickel Electronic Grade

NI 200 NI 270 NI 201

COIL SLIT TO YOUR WIDTH

Coil/Sheet: .003 - .062
Rod: .050 - .500

PLATE FROM STOCK

Thickness

0.250"	0.500"
0.812"	1.000"

OTHER SIZES & TEMPERS AVAILABLE

Molybdenum

ASTM B386 & B387; Type 361

Sheet .003" thru .125"
Plate .187" thru 2.000"
Rod .060" thru 2.600"

Available From Stock

Stencil Grade

Stainless Steel

304 304L 316 316L

CHEMICAL MILLING & LASER CUTTING GRADES

12" Wide (coil & sheet) x .0015 & .002
24" Wide (coil & sheet) x .003 - .015

Invar

Solder Paste Stencil

.004 - .015 x 24" x Your Length
(Coil & Sheet)

For Finer Line Etching & Laser Cutting
For Small Holes 24" WIDE x COIL ALSO AVAILABLE in 10#, 20#, 50#, 100#
All Coils On Cores 8"ID & 16"ID

Copper Based

OFHC COPPER

Most Common Sizes
Up To .080 TK Slit Widths Up To 12" Wide
Sheet – Plate – Rod Also Available
ASTM B 152 • CDA 101 or CDA 102

NICKEL SILVER 770

ASTM B 122 – TENSION LEVELED COIL
.005, .010, .015 x 12" x Coil

ALLOYS 735, 752, & 762 also available

CUPRO NICKEL 70/30 CDA 715

ASTM B 122 – TENSION LEVELED COIL
.005, .010, .015 x 12" x Coil

CDA 725 available upon request

PHOSPHOR BRONZE CDA 510,521

ASTM B 103 – TENSION LEVELED COIL
.005, .008, .010, .015 x 12" x Coil

AVAILABLE IN SMALL QUANTITIES "FROM STOCK"
Other sizes available upon request
SHEETING AVAILABLE UPON REQUEST

Steel

1010 STEEL

Special For Close Tolerance Applications
FROM STOCK IN ONE OR TWO DAYS

Slit To Your Width

.010	.035
.015	.040
.020	.050
.025	.060
.030	.067

Our Steel is Made for Those Who Understand and Want Quality

Our Material with Close Tolerances Saves You Time and Money on Set Up and Maintenance and is Progressive Die Friendly

NEA
ISO 9001:2015
Specialty Metal Service Center
Dedicated to Customer Service & Quality

NATIONAL ELECTRONIC ALLOYS
www.nealloys.com

EAST COAST
3 Fir Court, Oakland, NJ 07436
201-337-9400 • Fax: 201-337-9698
Toll Free: 800-524-4309
Email: Sales@nealloys.com

WEST COAST
1847 W. Business Center Dr., Orange, CA 92867
714-556-5561 • Fax: 714-556-5562
Toll Free: 877-632-9378
Email: Sales@nealloyswest.com